NOT FOR SALE



MBF-02 STRIKE ROUGE GUNDAM

REFINE VERSION

General and Technical Data

Model number: MBF-02
Code name: Strike Rouge
Unit type: prototype all-purpose multi-mode mobile suit
Manufacturer: Morgenroete, Inc
Operator: Orb Union/Three Ships Alliance
First deployment: 26 September C.E. 71
Accommodation: pilot only, in standard cockpit in torso
Dimensions: head height 17.72 meters
Weight :max gross weight 64.8 metric tons
Armor materials: unknown
Powerplant: ultracompact energy battery, power output rating unknown
Equipment and design features: sensors, range unknown; Phase Shift (PS) armor; hardpoints for mounting Striker packs
Fixed armaments: 2 x "Igelstellung" 75mm anti-air vulcan gun, fire-linked, mounted in head; 2 x 'Armor Schneider' combat knives, stored on hip armor

Color Guide

A-H	P.PINK	8
I-Q	BLACK	9
R-S	RED	2
T	PINK	1
U	WHITE	1

MODELING BY CREAM-BREAD

INFORMATION	
1–9	HEAD

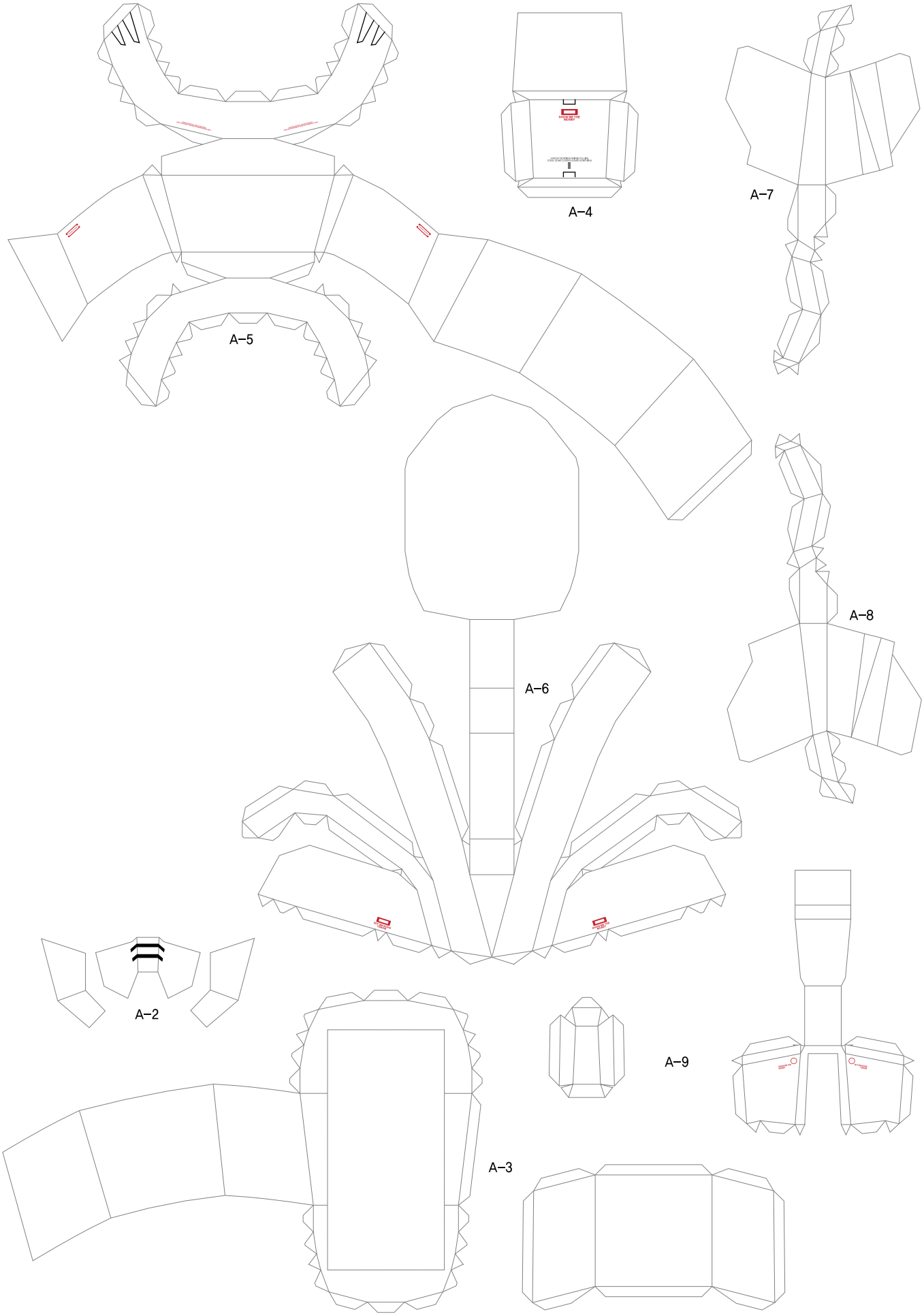

B p.pink MODELING BY CREAM-BREAD /GAT-X105 STRIKE GUNDAM

INFORMATION	
1–11	HEAD
12–15	CHEST

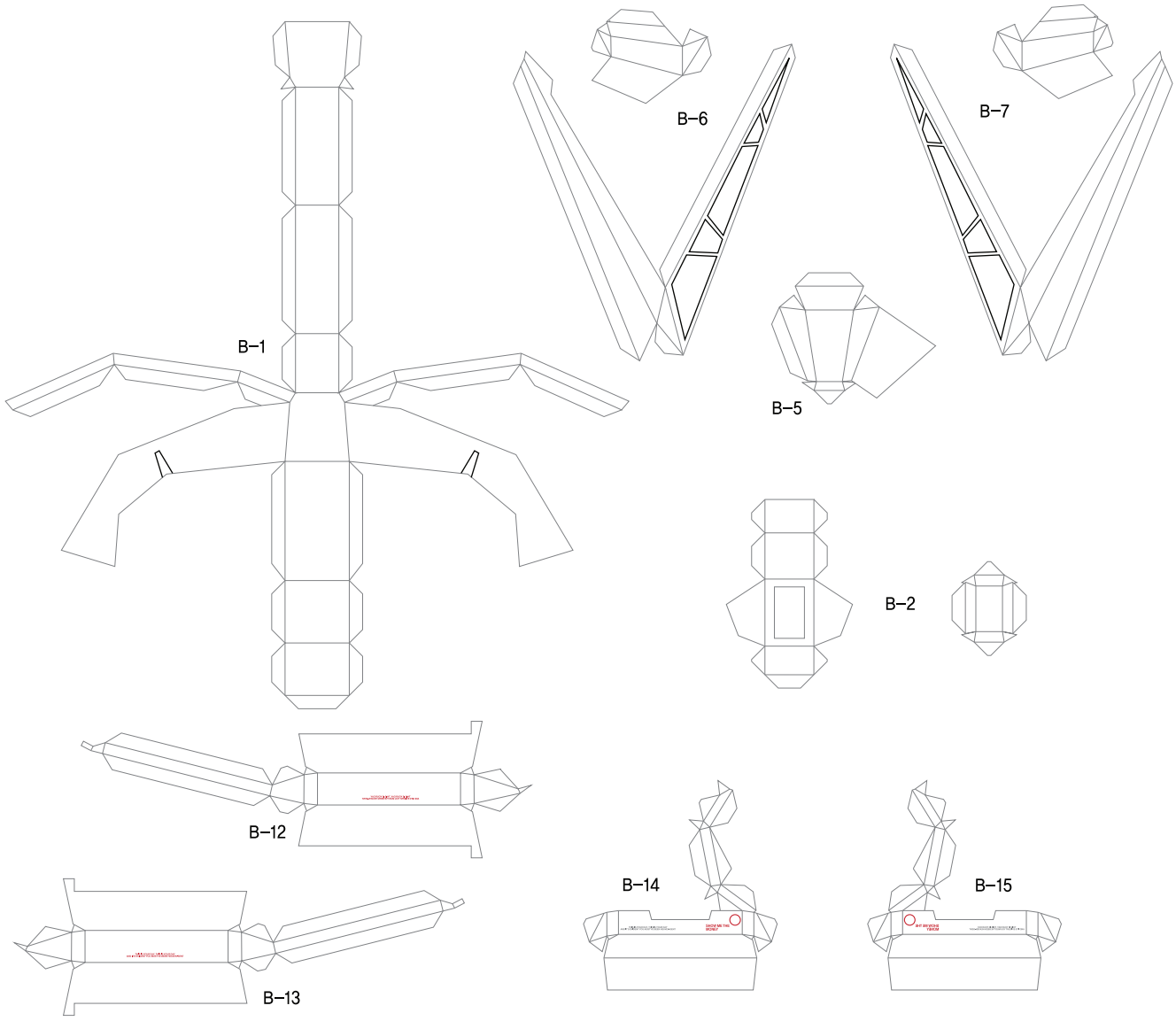



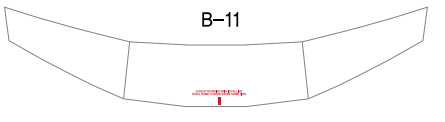

INFORMATION
1–17 PELVIS

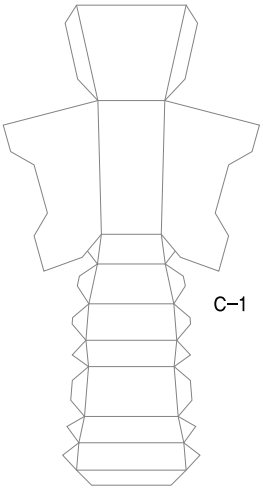
C–1

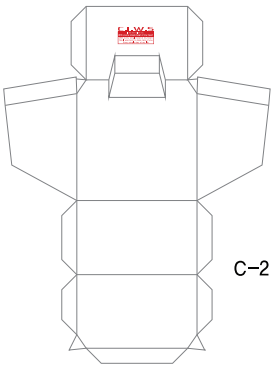
C–2

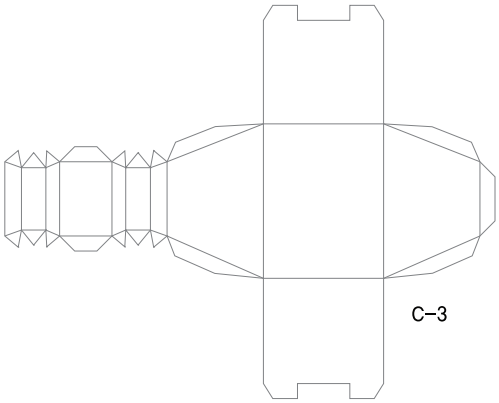
C–3

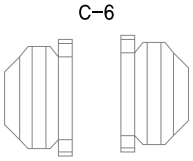
C–6

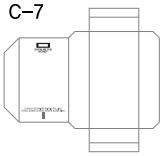
C–7


C–8

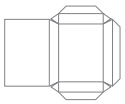
C–9

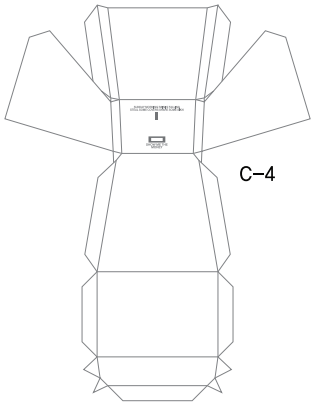
C–4

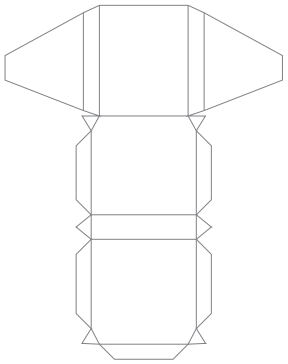
C–5

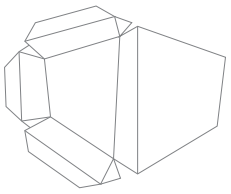
C–10

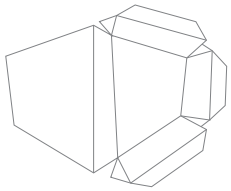
C–11

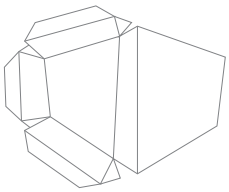

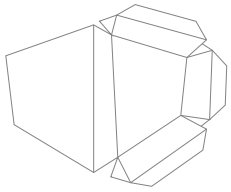

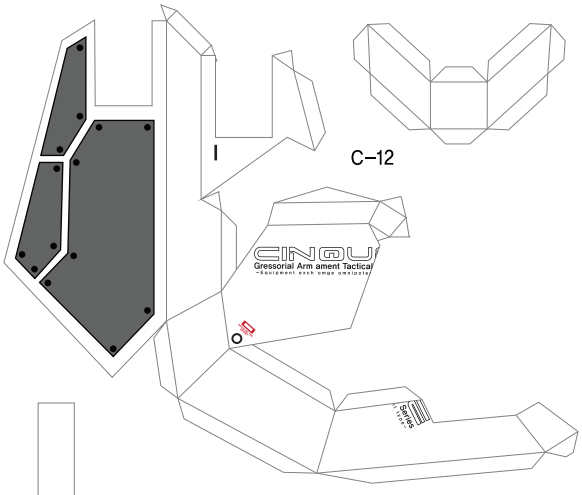

C–12

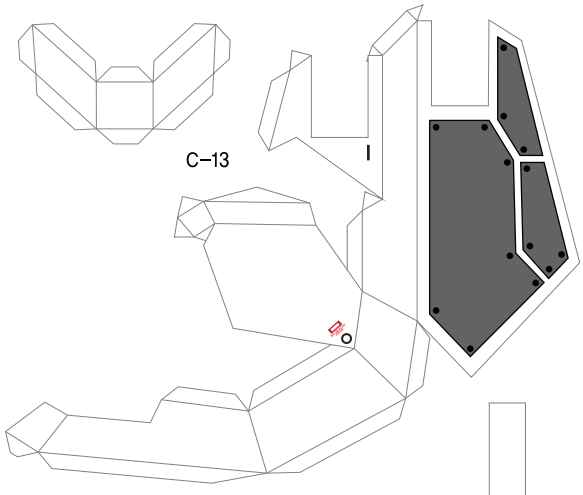
C–13

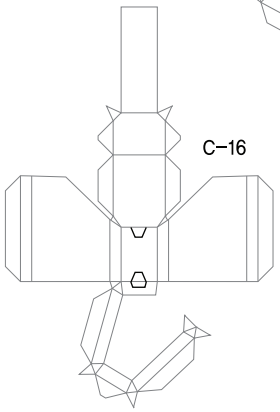
C–16



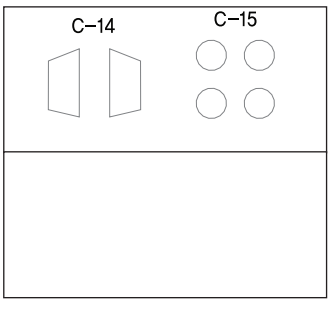
C–14 C–15



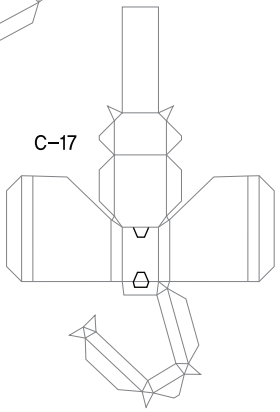
C–17

INFORMATION
1–10 PELVIS

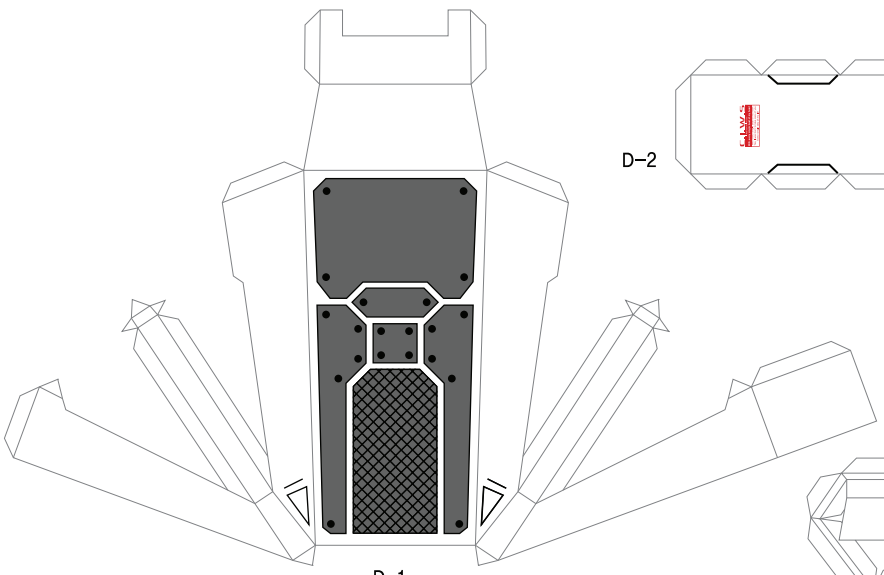
D–1

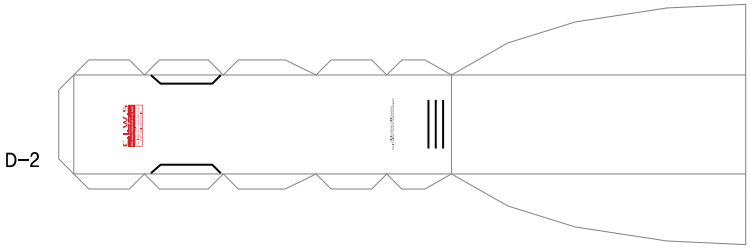
D–2

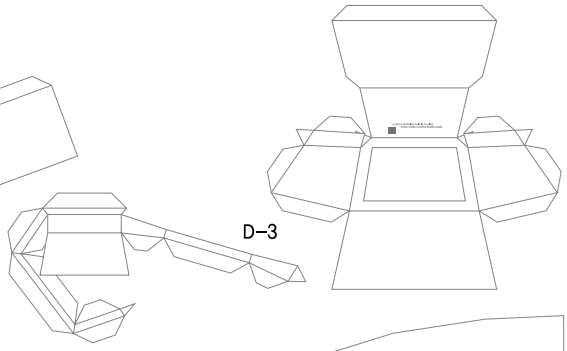
D–3

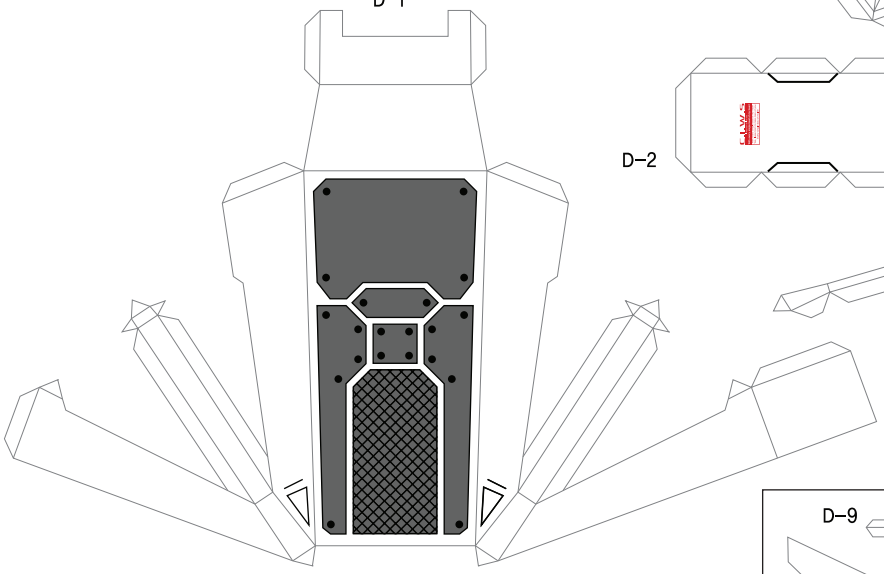

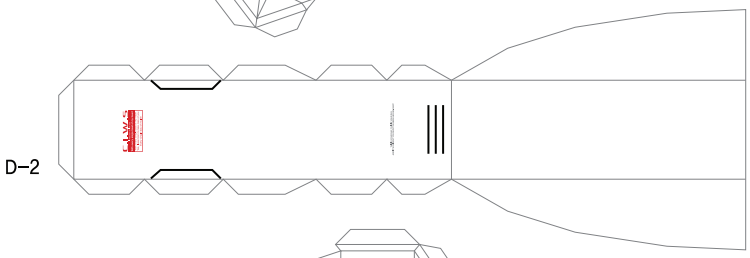
D–2

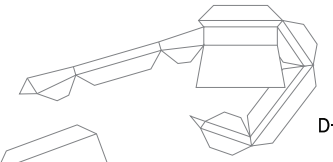
D–4

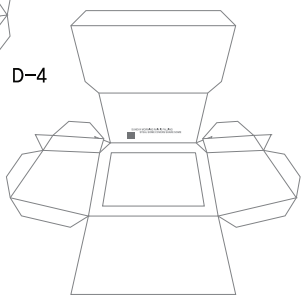

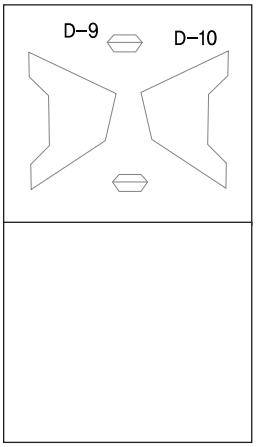
D–9 D–10

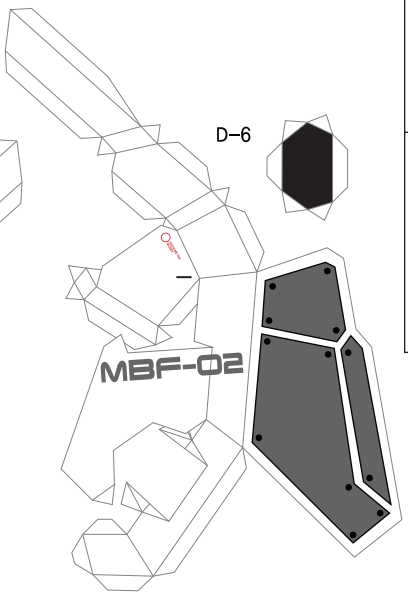
D–6

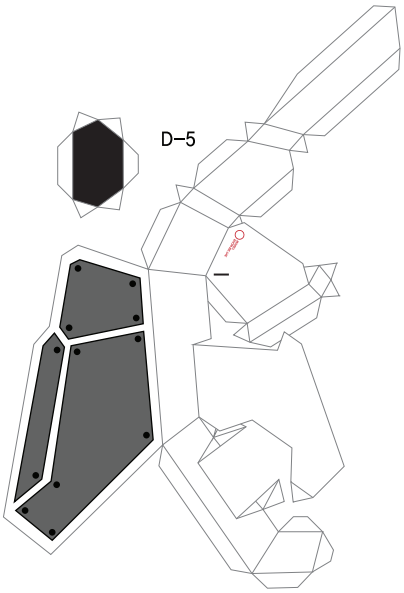
D–5

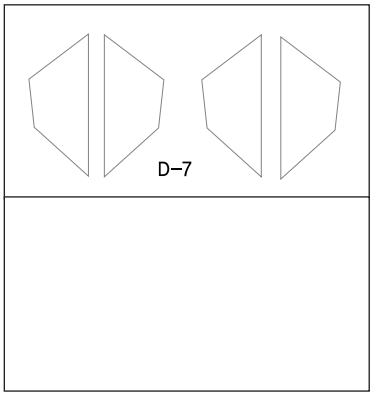
D–7

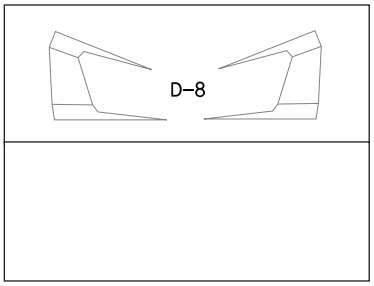
D–8

INFORMATION
1–20 R.LEG

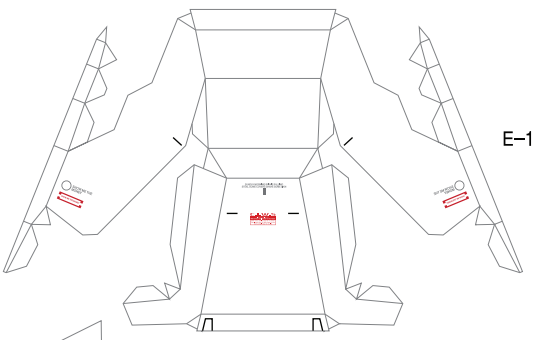

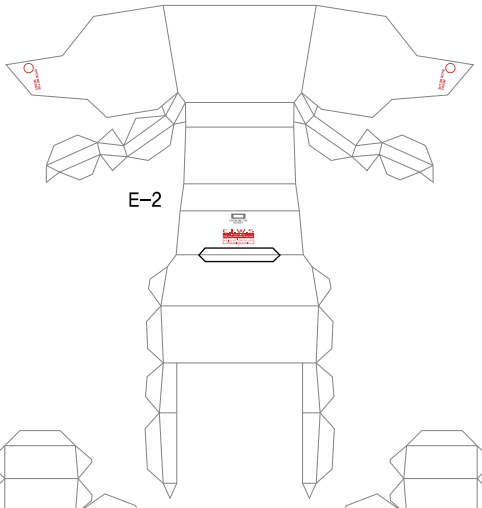

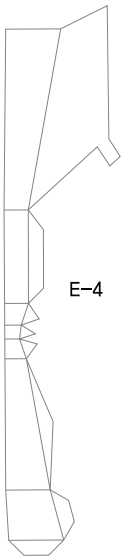

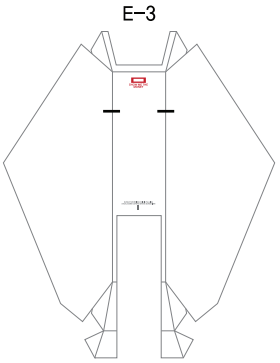

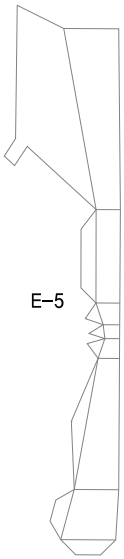

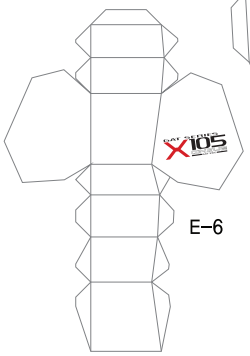

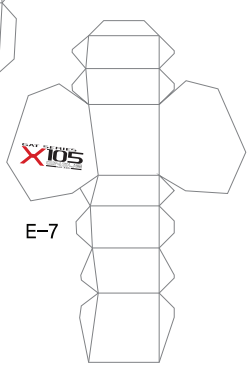

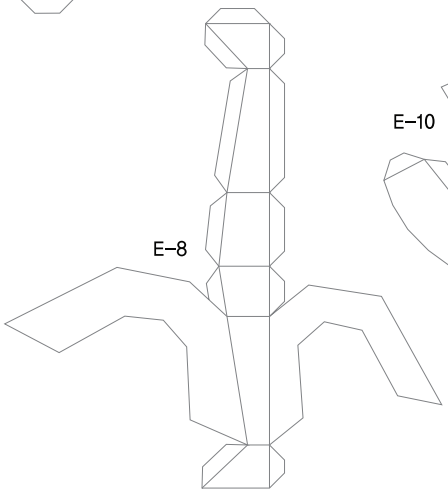

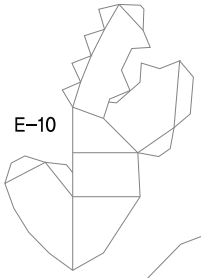

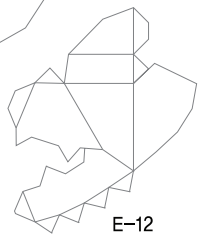

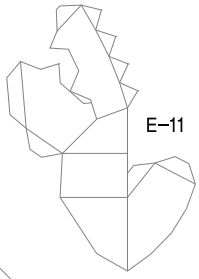

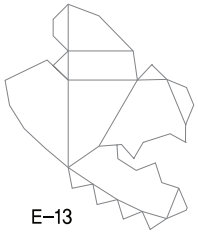

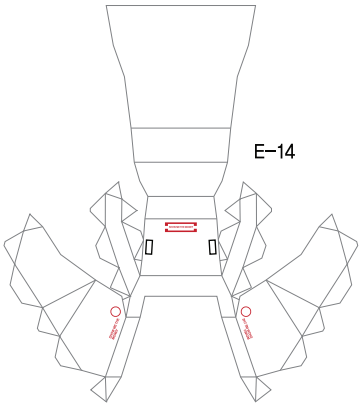

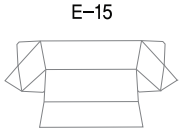

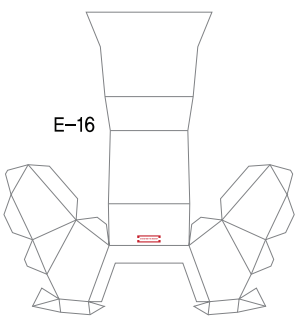

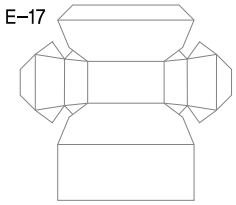

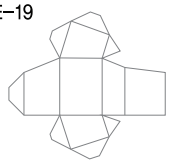

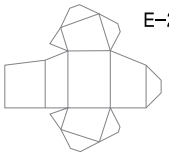

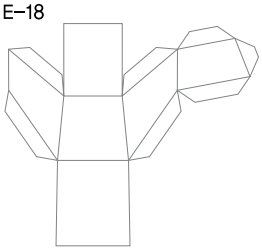

INFORMATION
1–20 L.LEG

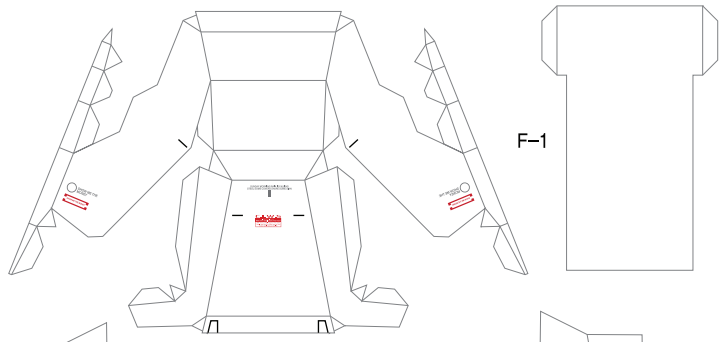
F–1

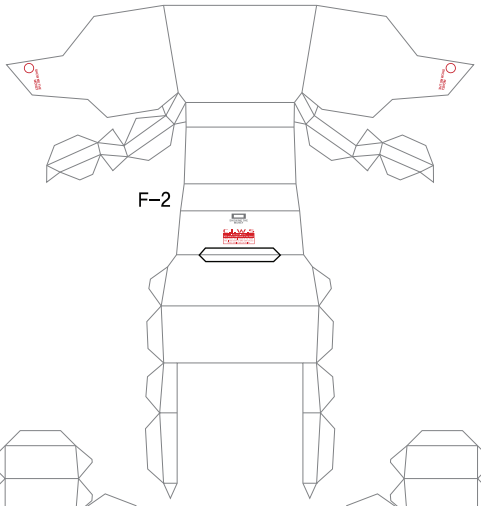
F–2

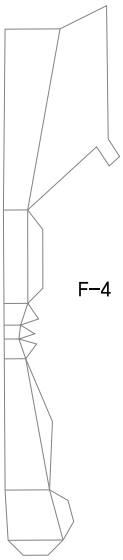
F–4

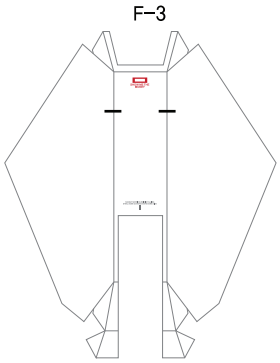
F–3

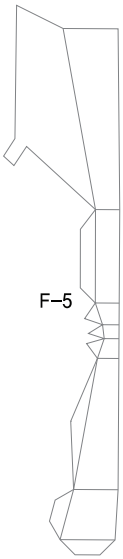
F–5

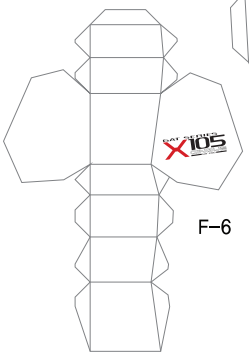
F–6

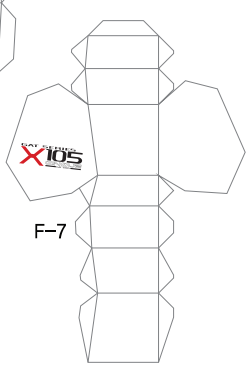
F–7

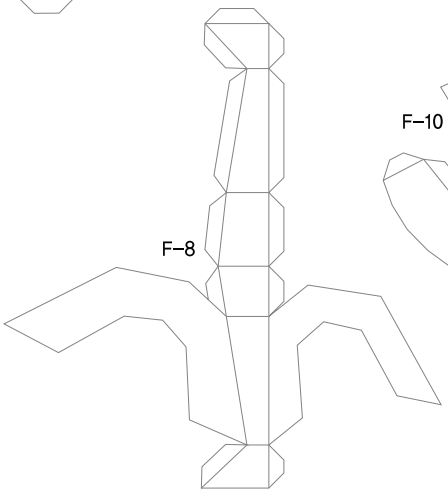
F–8

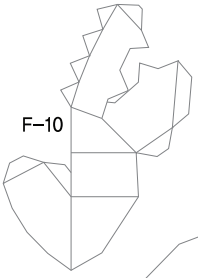
F–10


F–12

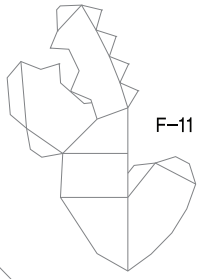
F–11

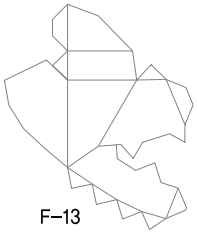
F–13

F–9

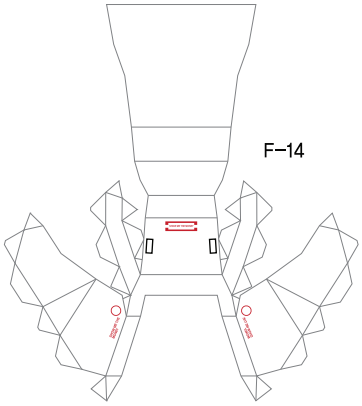
F–14

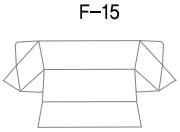
F–15

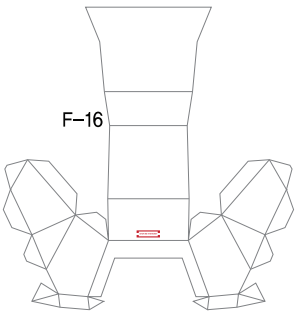
F–16

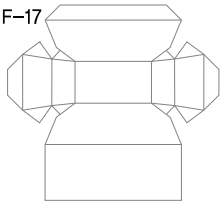
F–17

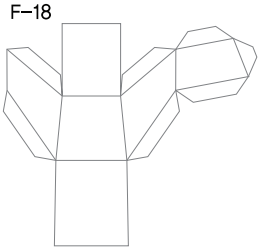
F–18

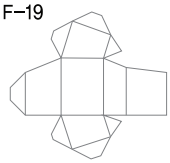
F–19

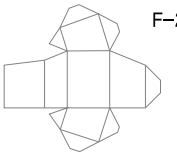
F–20

G p.pink MODELING BY CREAM-BREAD /GAT-X105 STRIKE GUNDAM

INFORMATION	
1–4	R.LEG
5–21	R.ARM

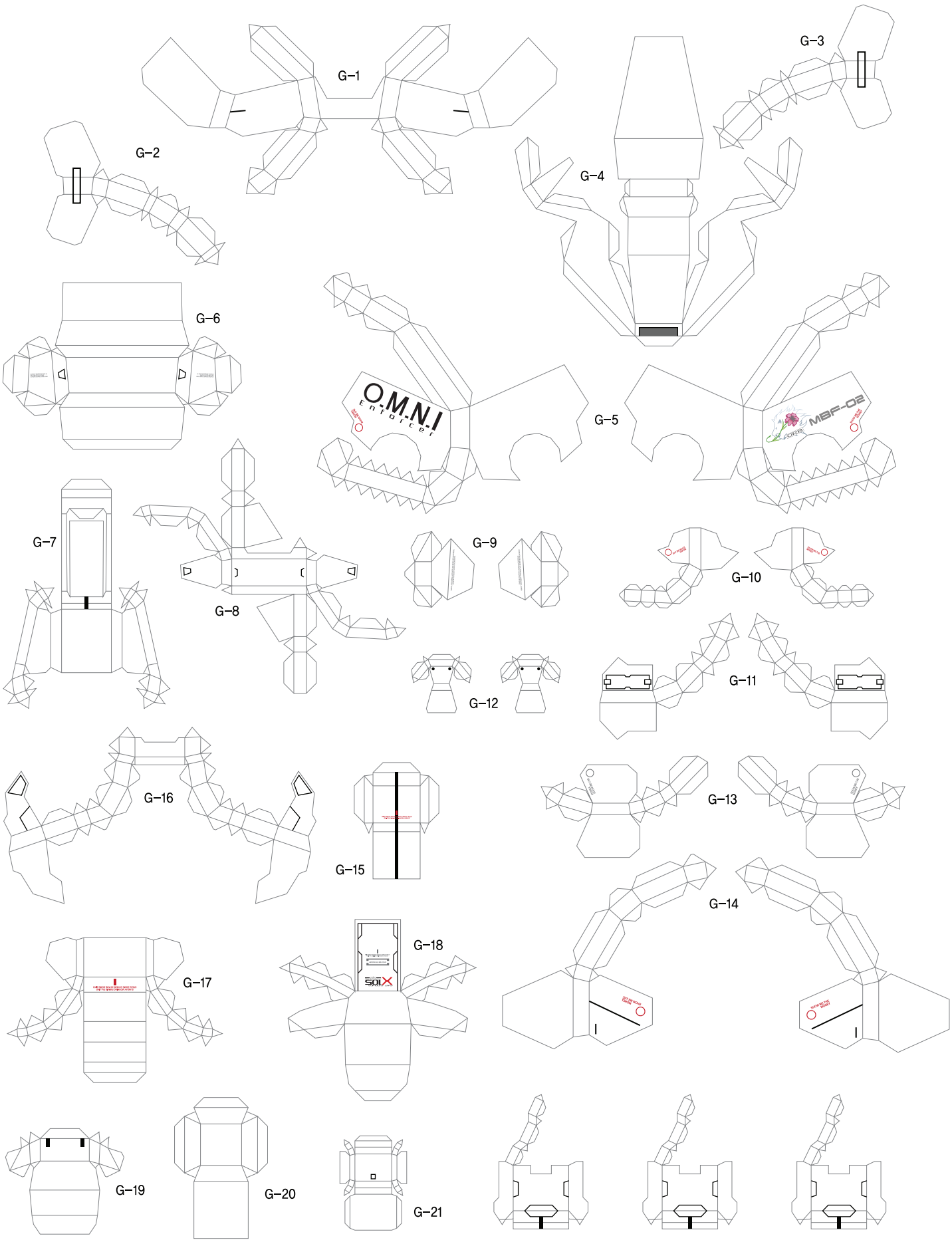

H p.pink MODELING BY CREAM-BREAD /GAT-X105 STRIKE GUNDAM

INFORMATION	
1–4	L.LEG
5–21	L.ARM

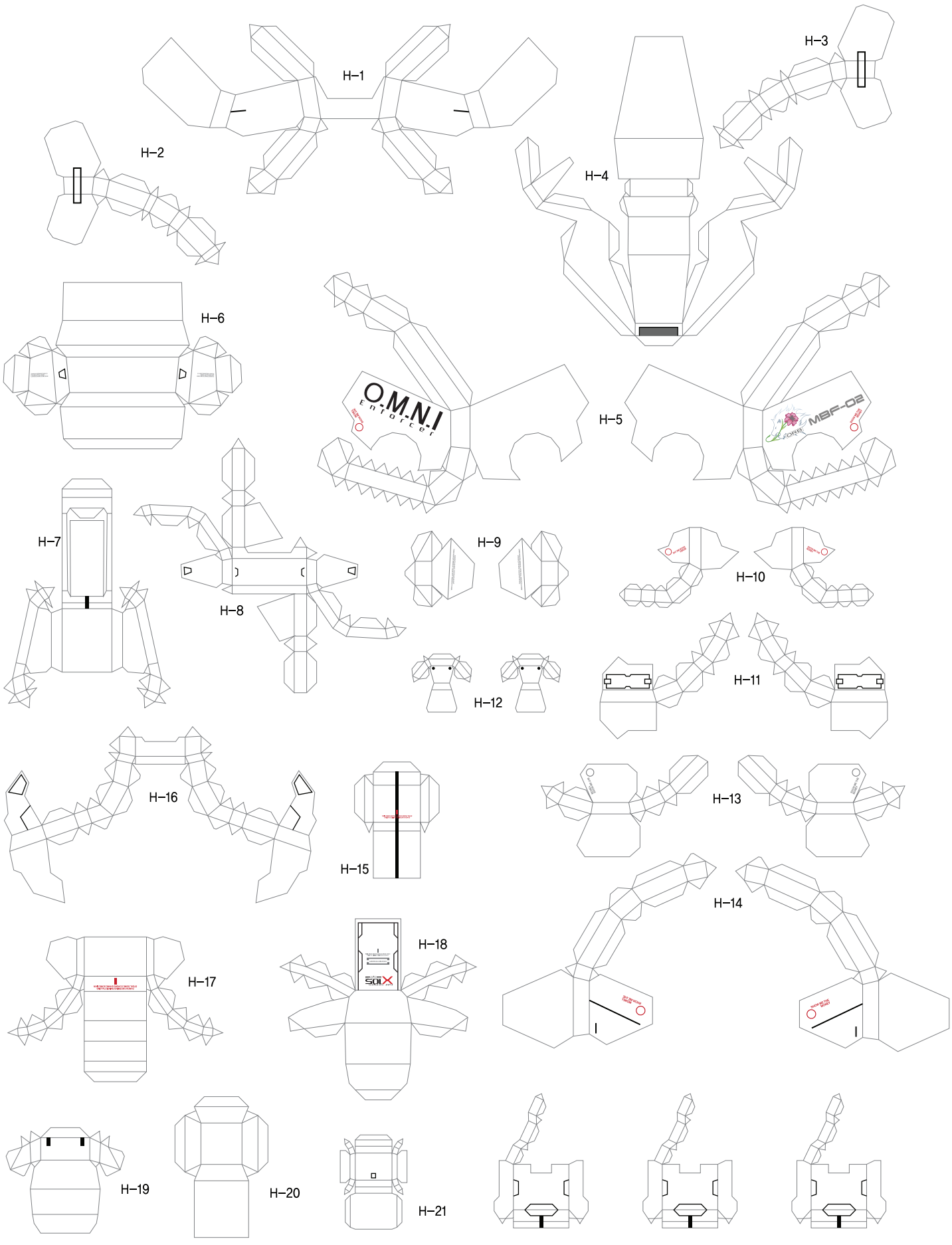

INFORMATION	
1–8	HEAD
9–15	CHEST

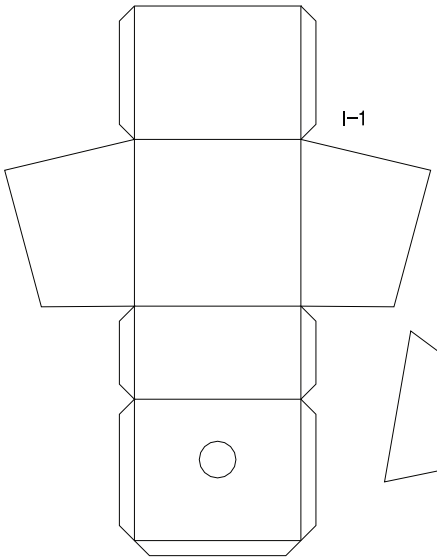

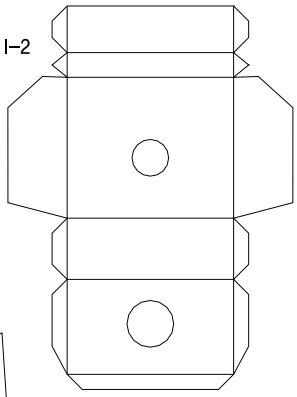

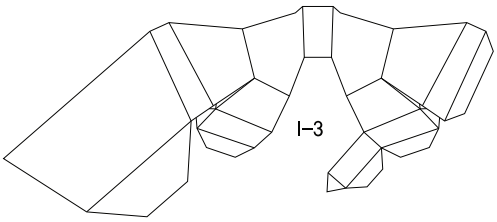

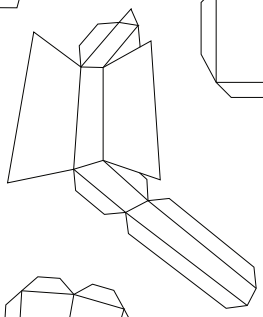

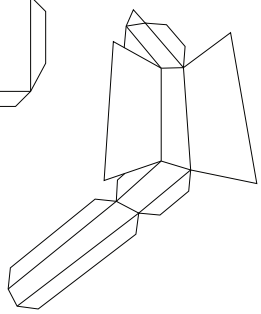

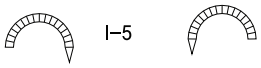

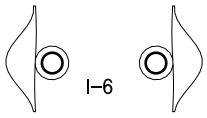

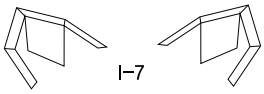

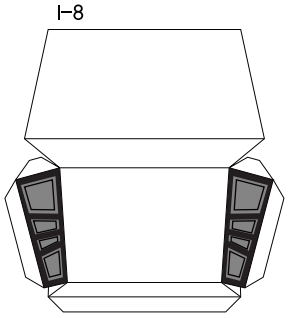

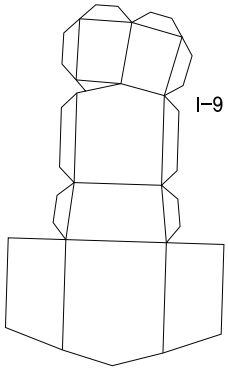

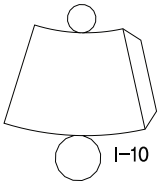

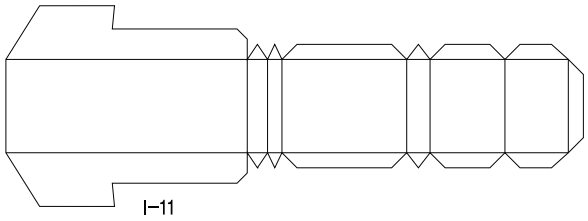

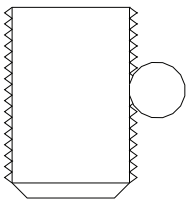

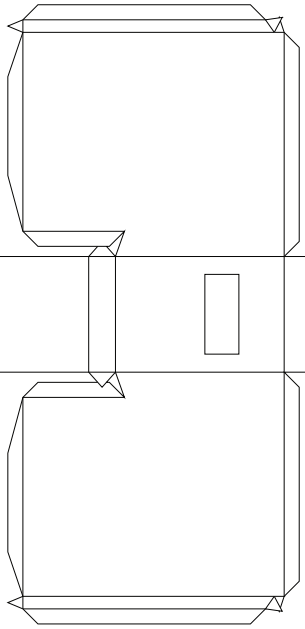

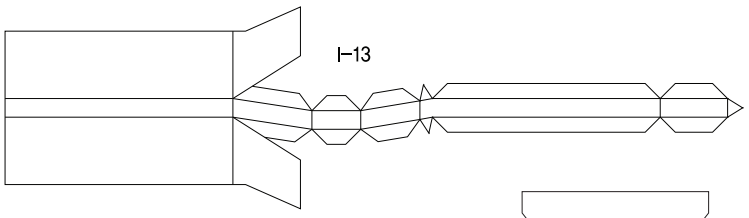

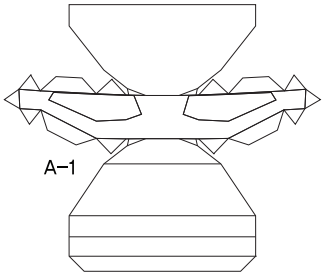

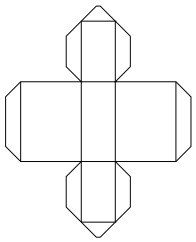

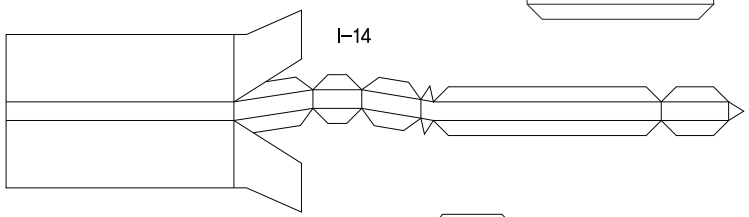

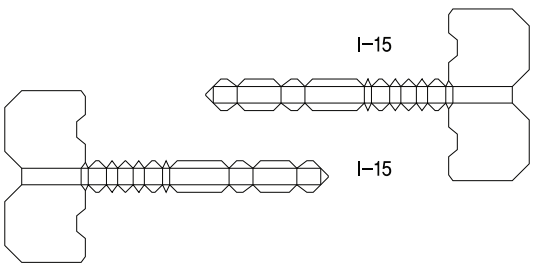

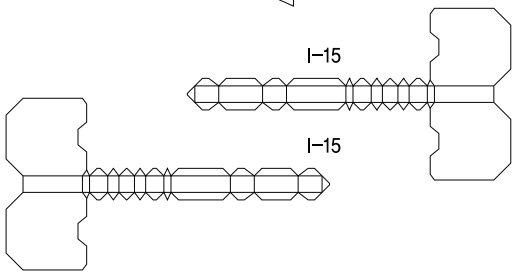

INFORMATION
1–17 CHEST

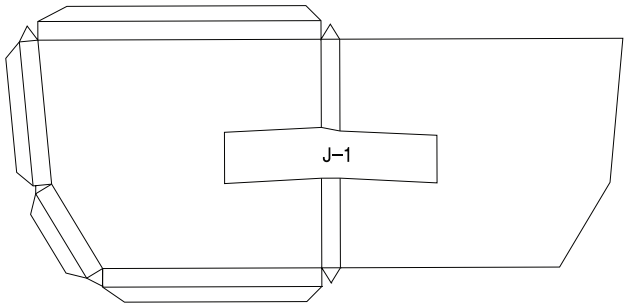

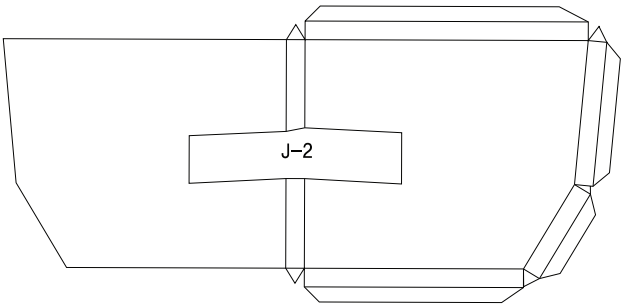

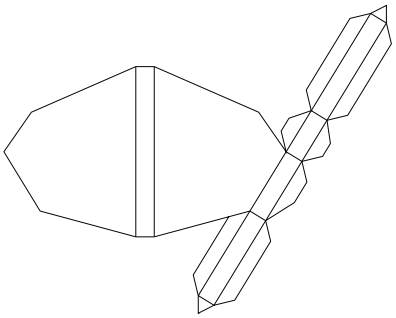

J–3

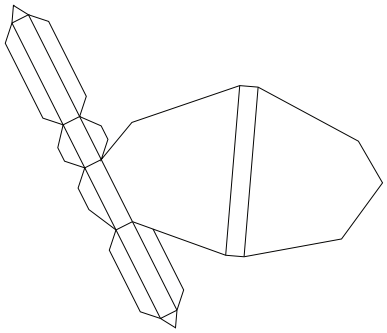

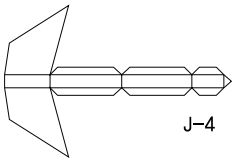

J–4

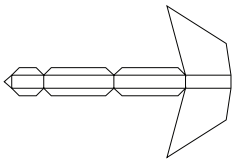

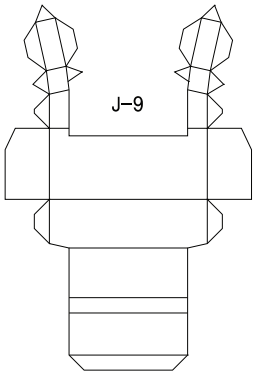

J–9

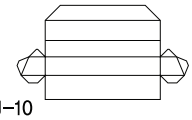

J–10

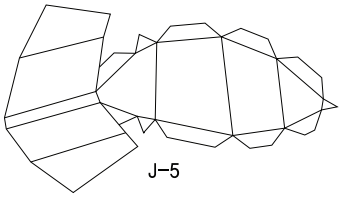

J–5

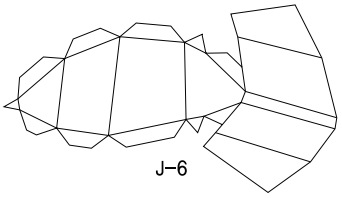

J–6

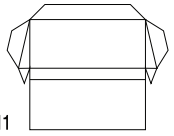

J–11

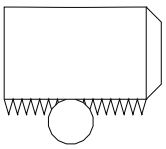

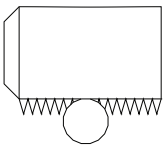

J–7

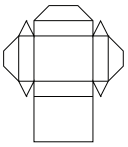

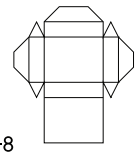

J–8

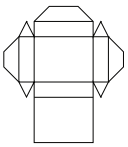

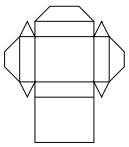

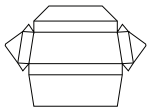

J–12

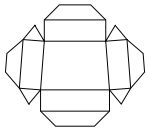

J–13

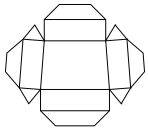

J–14



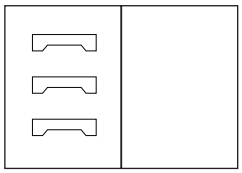

J–16

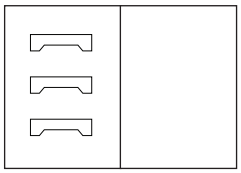

J–17

INFORMATION
1–20 PELVIS

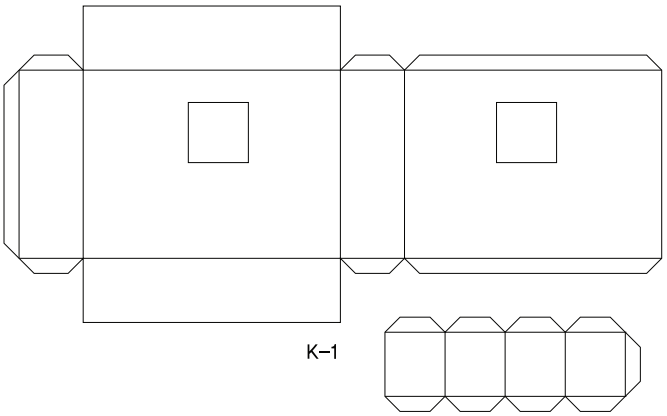
K–1

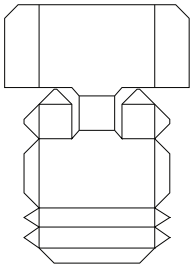
K–2

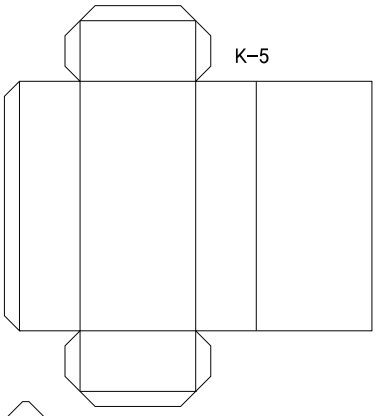
K–5

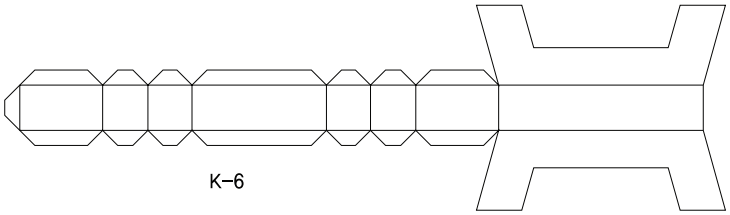
K–6

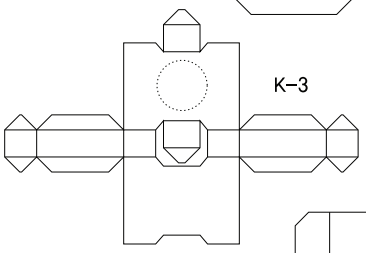
K–3

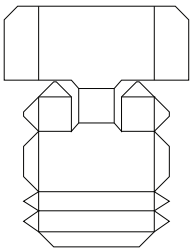
K–4

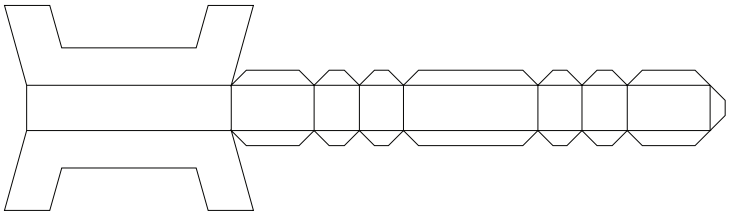

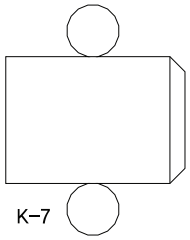
K–7

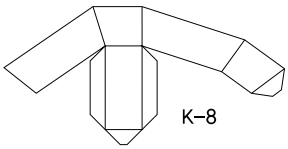
K–8

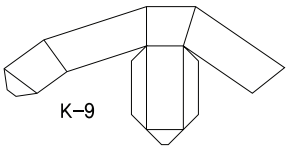
K–9

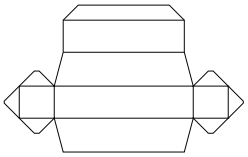
K–12

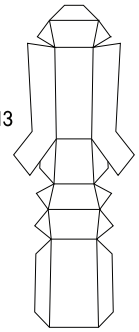
K–13

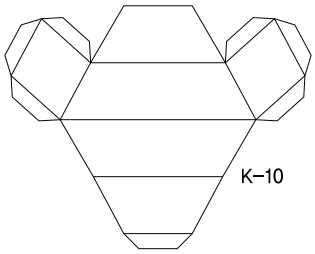
K–10

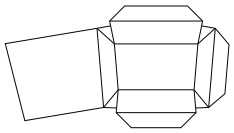
K–11

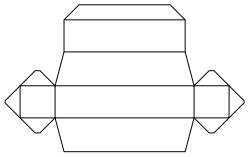

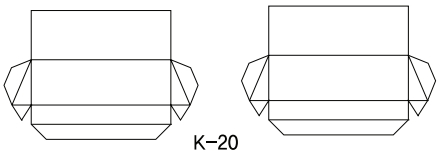
K–20

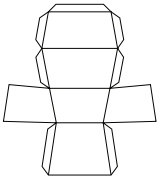
K–14

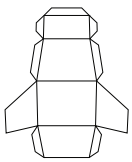
K–15

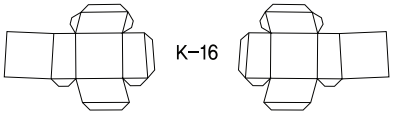
K–16

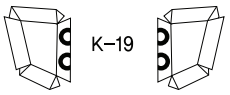
K–19

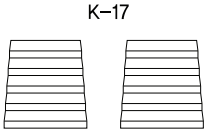
K–17

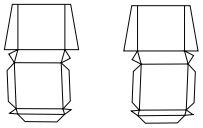
K–18

INFORMATION
1–15 R.LEG

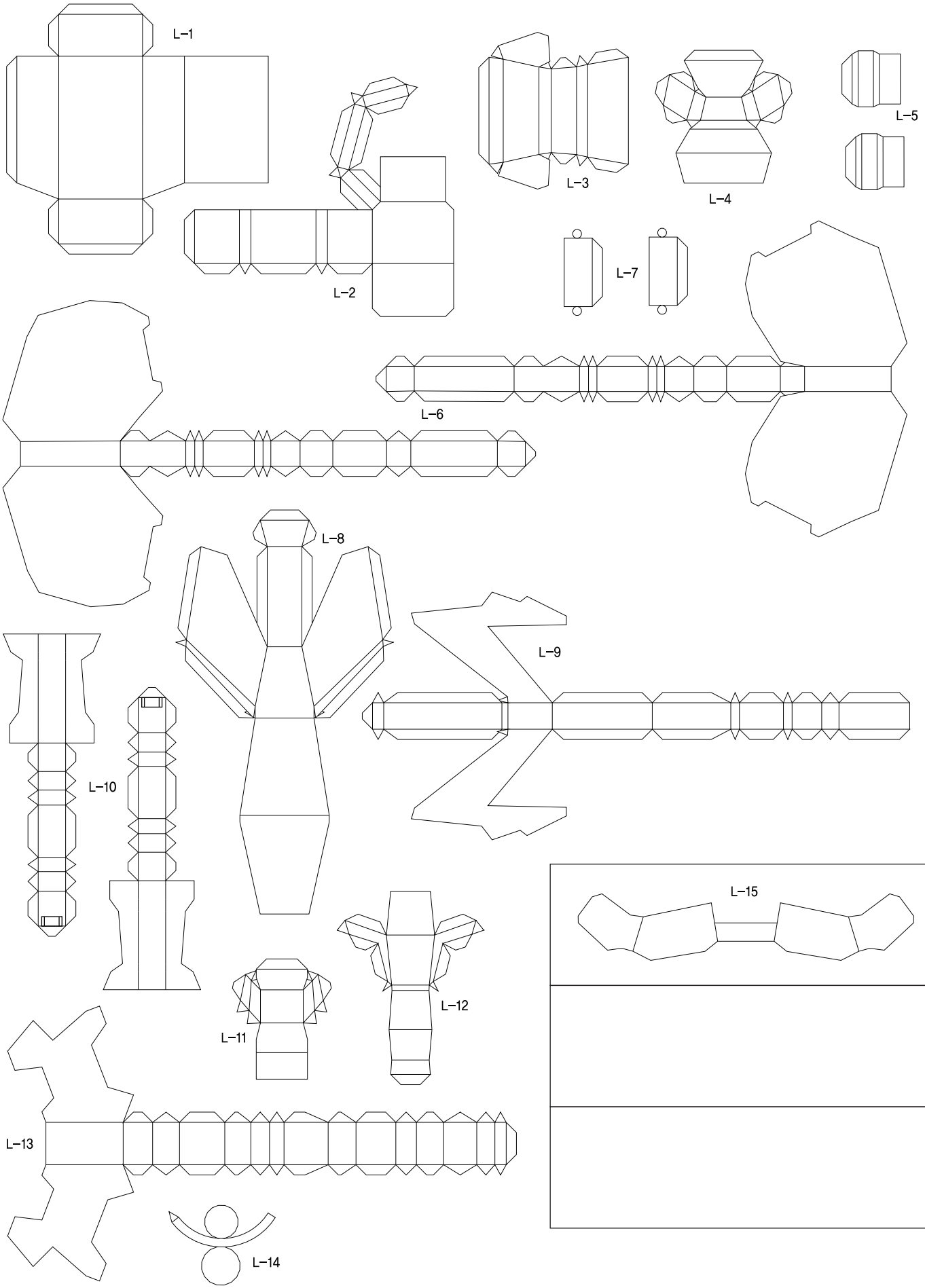

INFORMATION
1–15 L.LEG

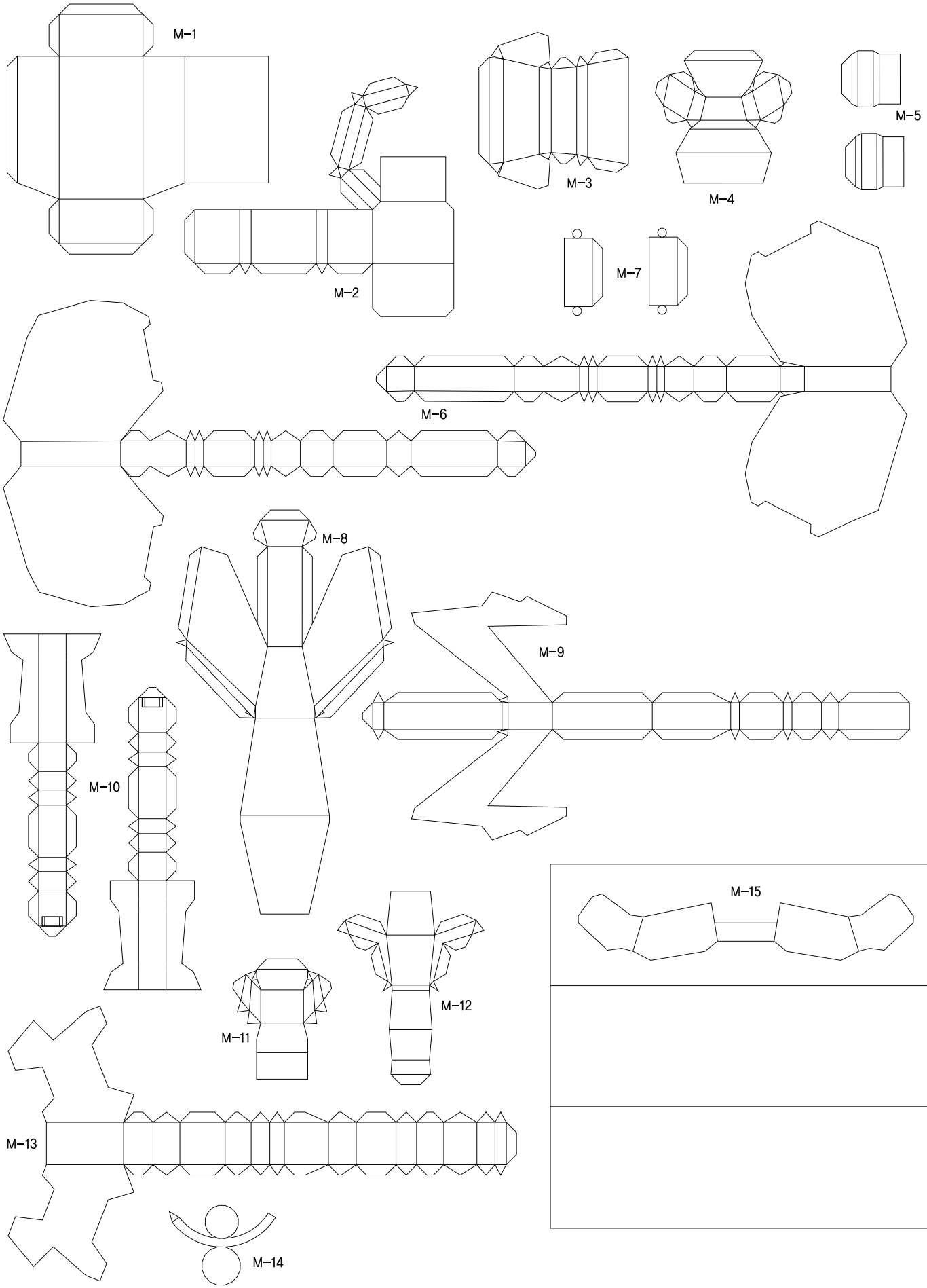

N black MODELING BY CREAM-BREAD /GAT-X105 STRIKE GUNDAM

INFORMATION	
1–8	R.LEG
9–16	L.LEG

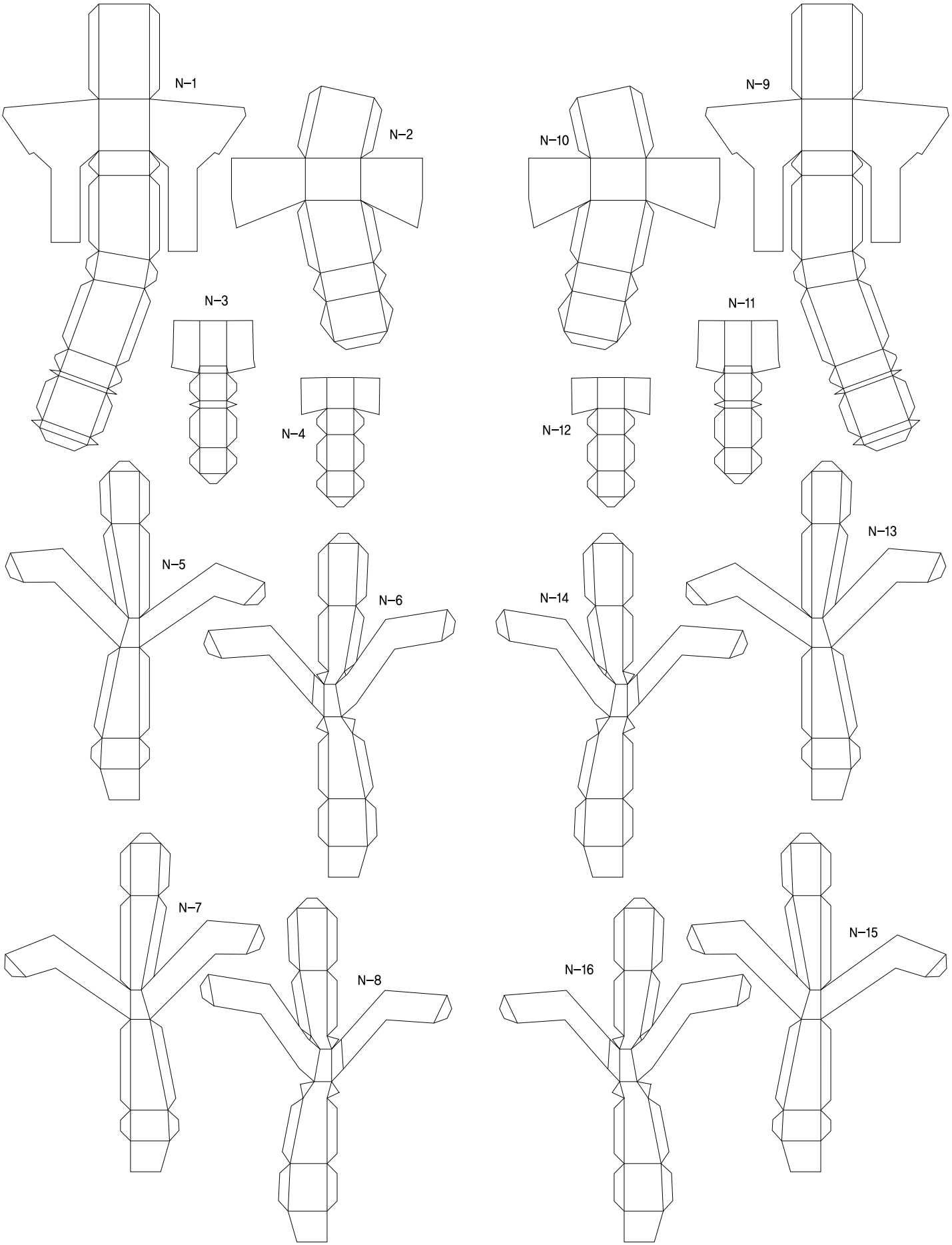

INFORMATION
1–30 R.ARM

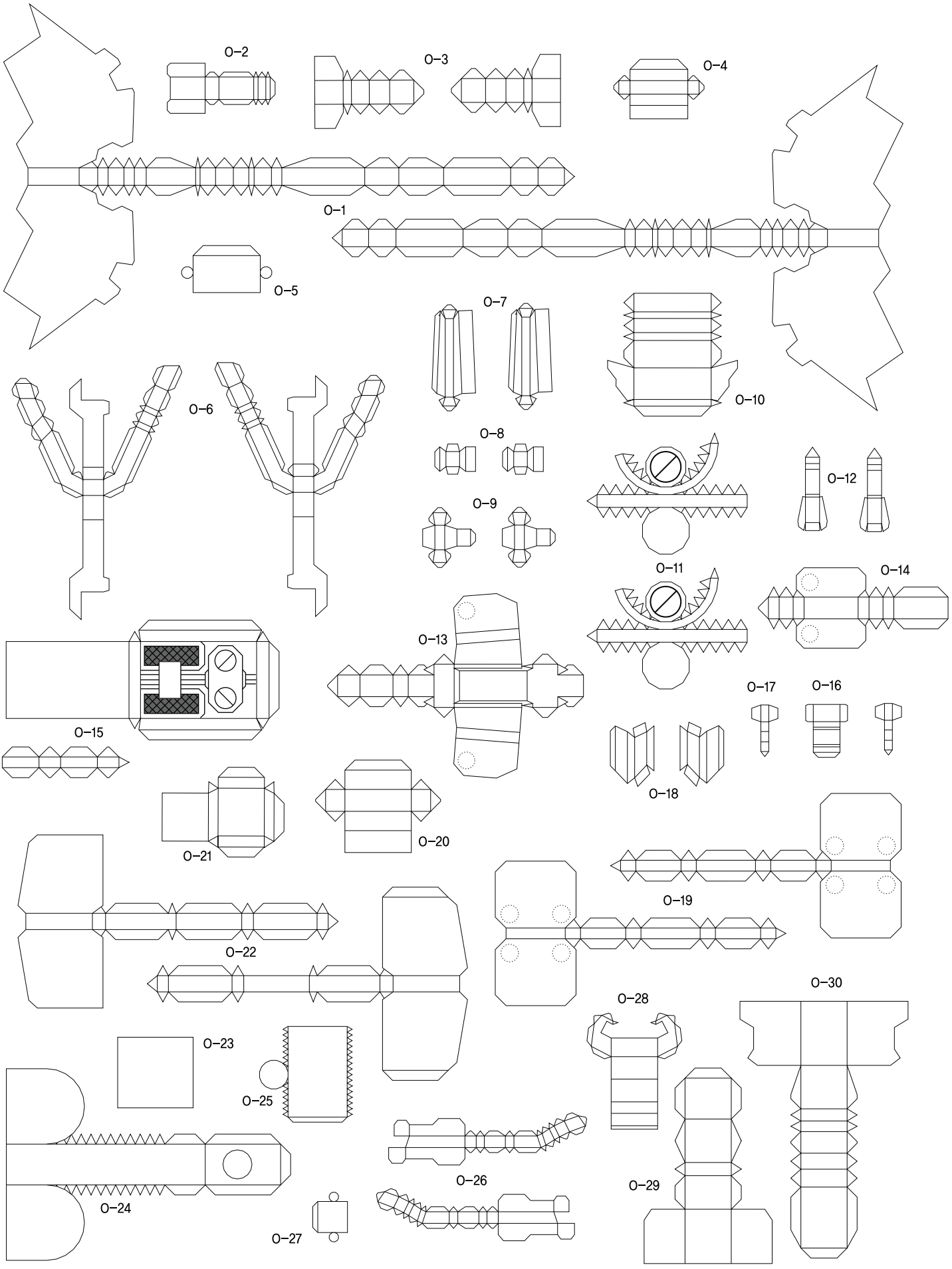

INFORMATION
1–30 L.ARM

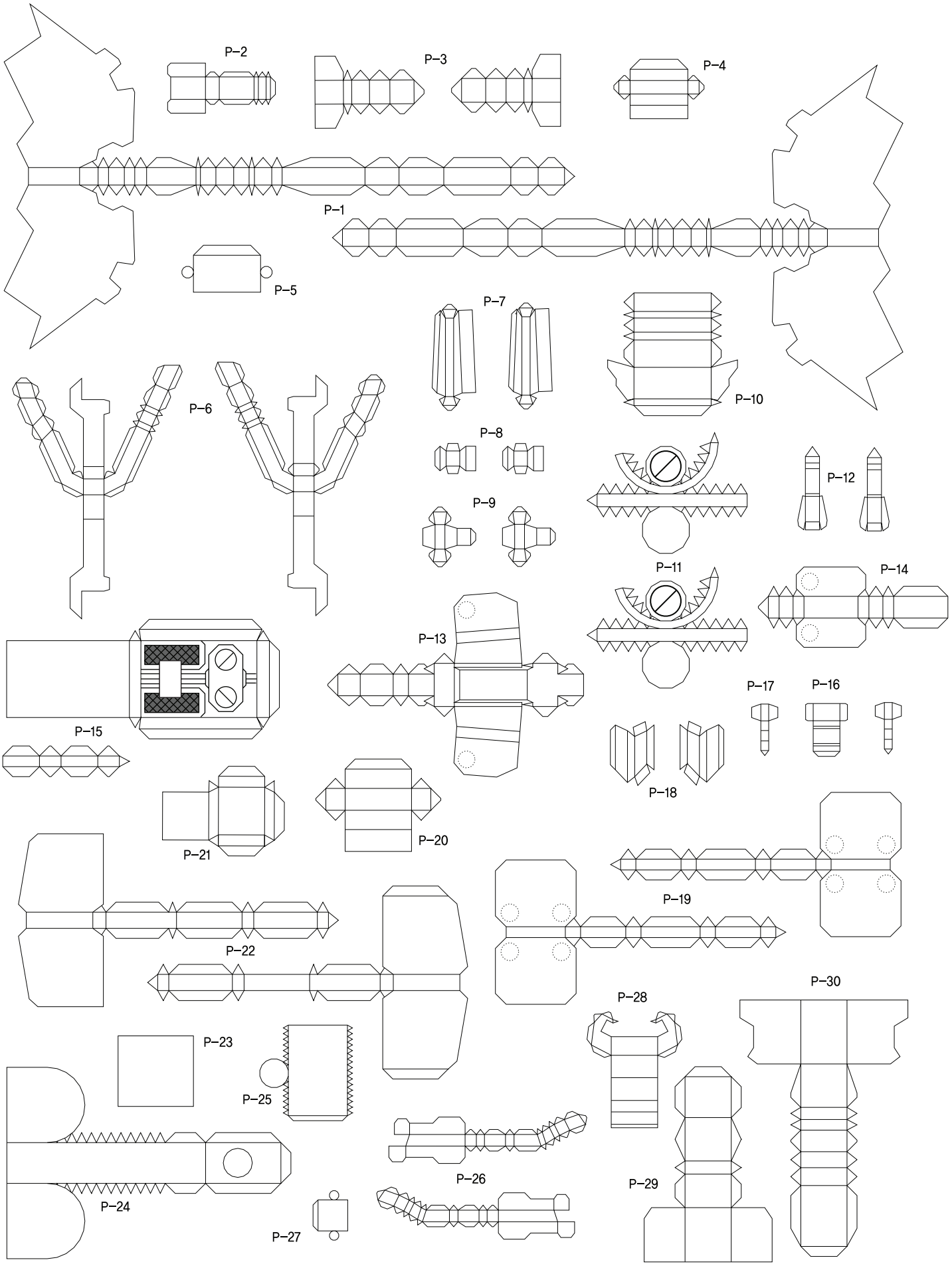

INFORMATION
1–3 HAND

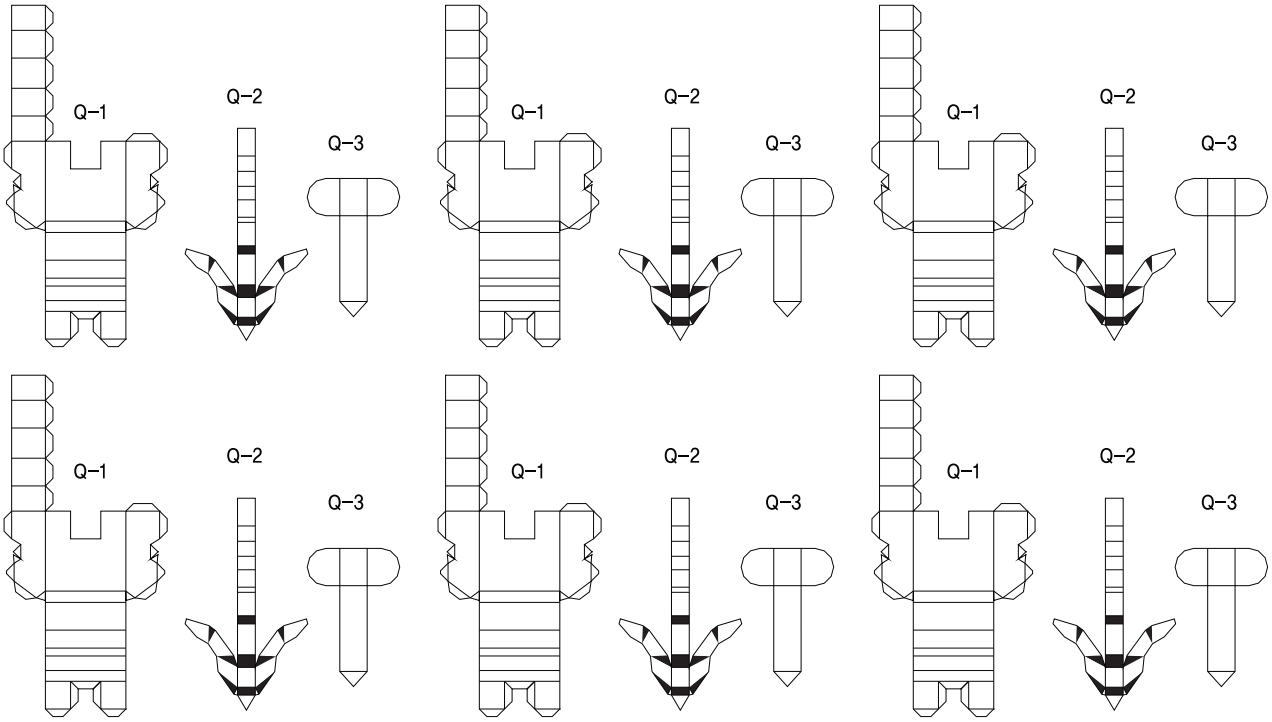

HAND_01

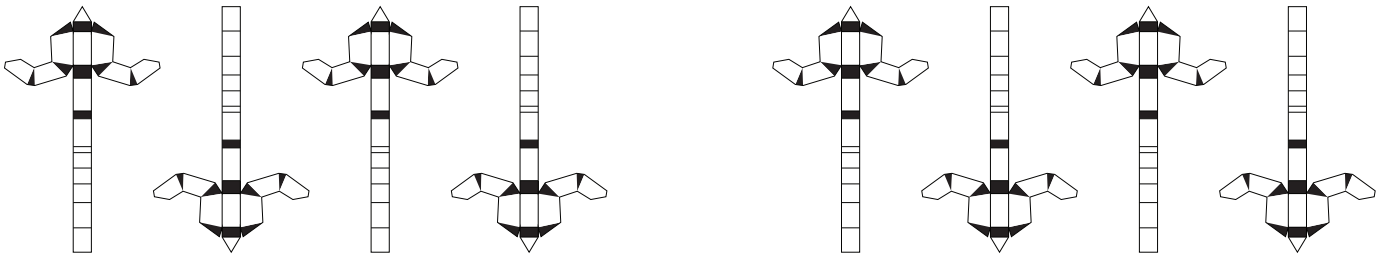

HAND_02



HAND_03

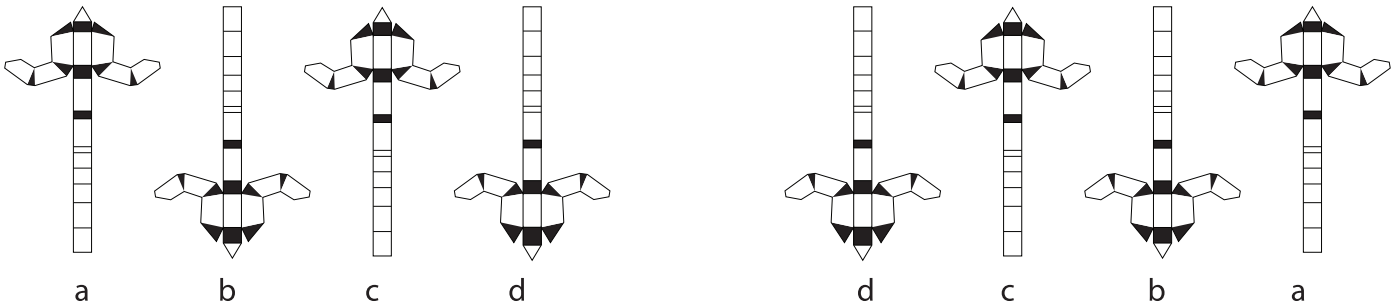

R red

MODELING BY CREAM-BREAD /GAT-X105 STRIKE GUNDAM

INFORMATION	
1–27	CHEST
28	PELVIS

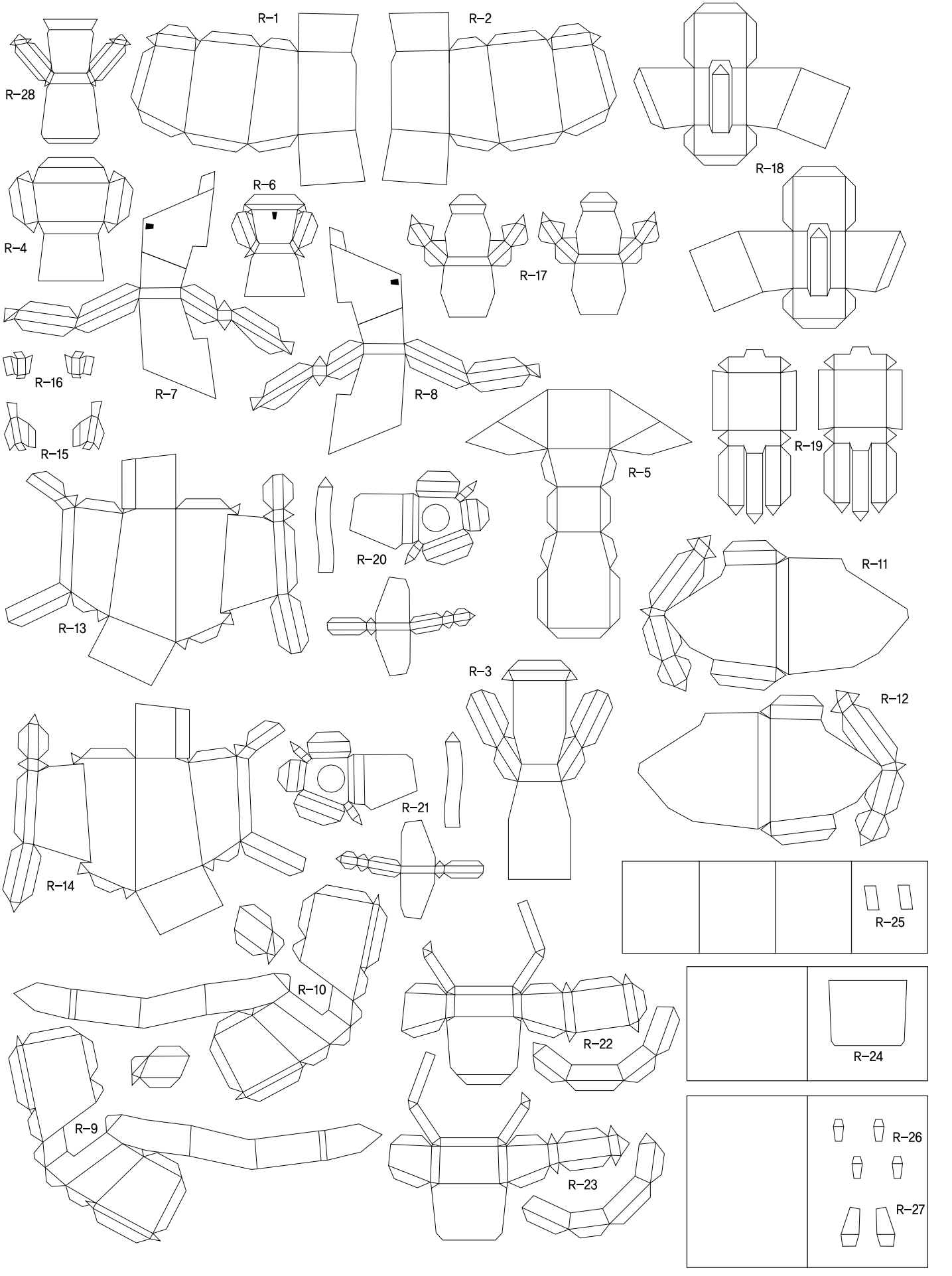

INFORMATION
1–3 HEAD

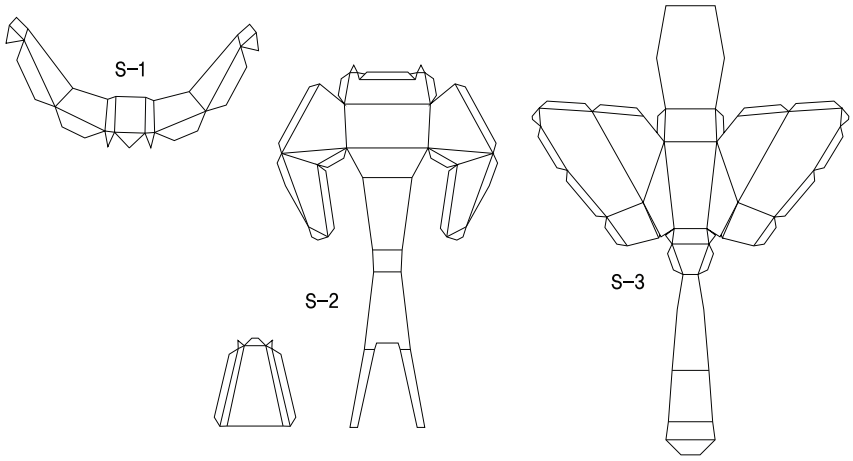

T pink

MODELING BY CREAM-BREAD /GAT-X105 STRIKE GUNDAM

INFORMATION			
1–3	HEAD	8–13	LEG
4–7	CHEST		

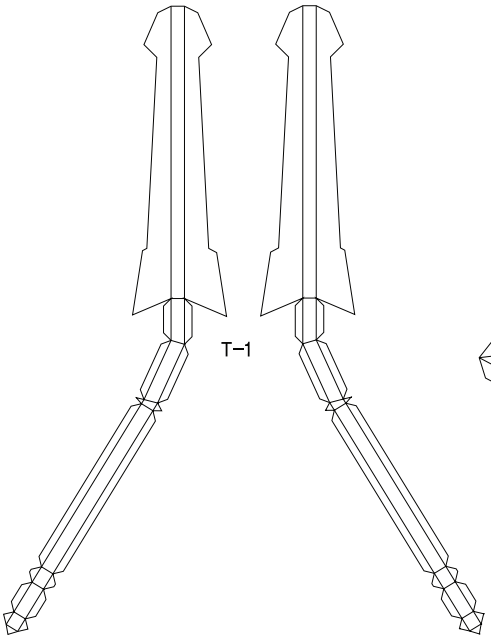

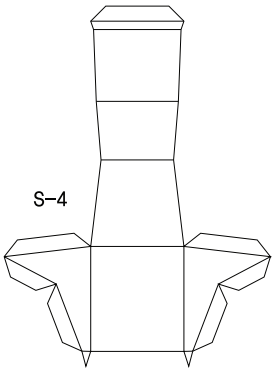

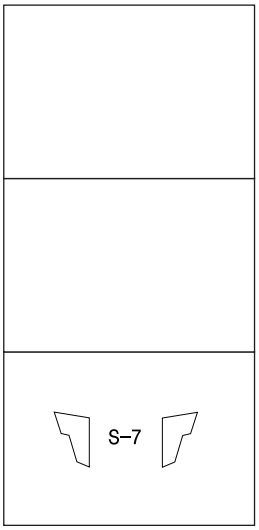

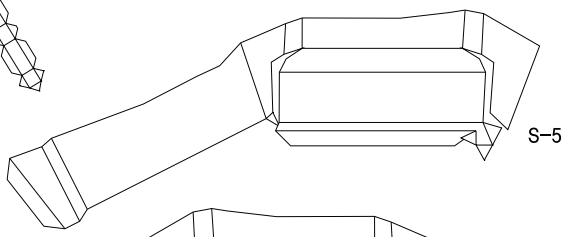

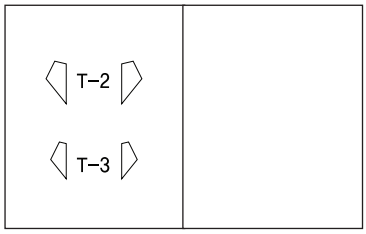

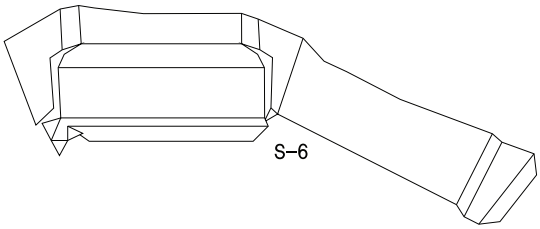

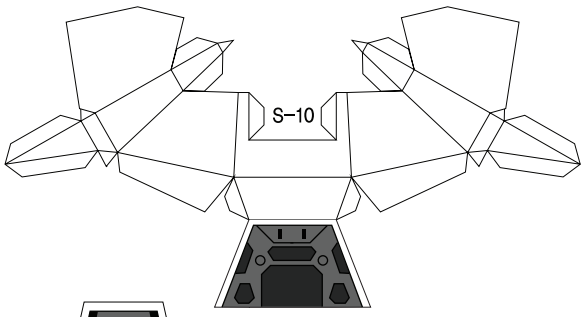

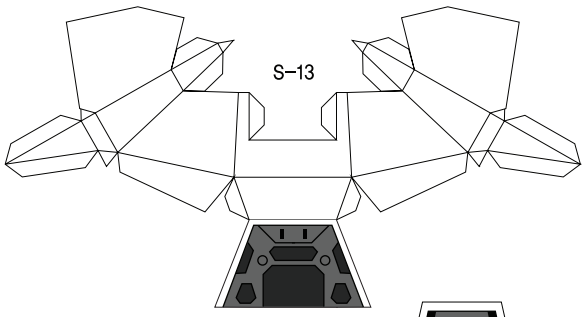

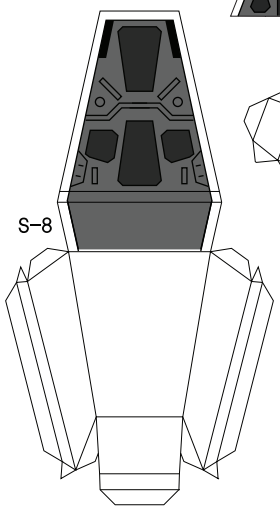

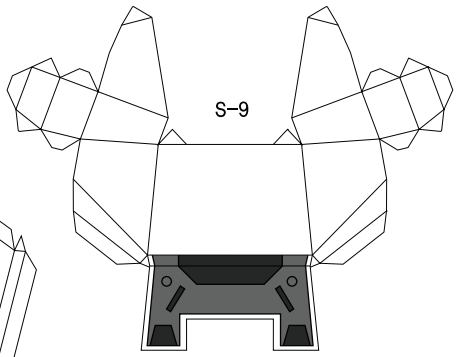

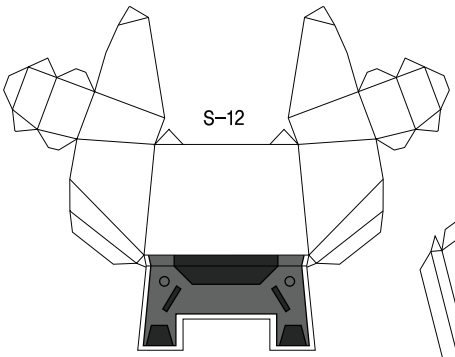

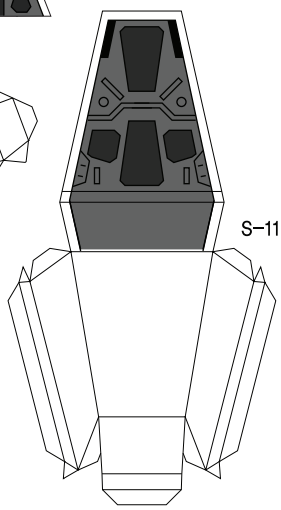

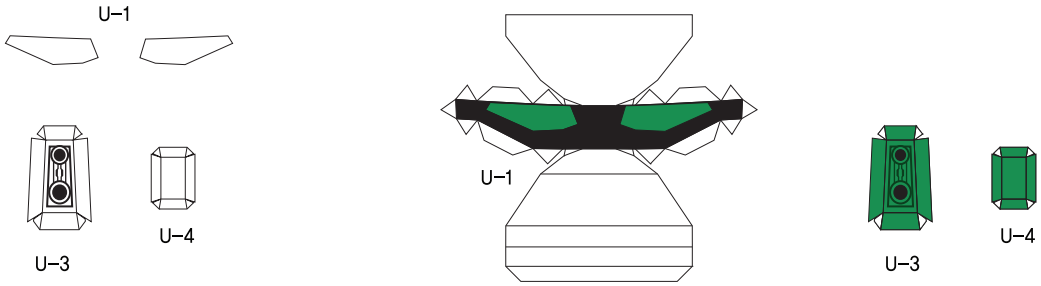

흰색이나 녹색중 취향에 맞게 프린트 후 사용하세요^^)~!